Clave

PrepaTec Departamento de ciencias PrepaTec Toluca Tecnológico de Monterrey	Energy & Transformation PC 6046 Grupo:	Professor: Alejandro Portales
	Partial Exam	February 16, 2022
	Name:	
	ID:	
	D	
	Points	

1) Find the angles and magnitude of the following vector

A= (26, -35, 25) $\|A\| = 50.25$

$\theta_x = 58.84°$

$\theta_y = 134.14°$

$\theta_z = 60.16°$

2) Find the cross and dote product of the following two vectors.

A= (9, 6, -7) B= (-6, 7, 9)

$A \times B$

i	j	k	i	j
9	6	7	9	6
-6	7	9	-6	7

$A \cdot B = -75$

$i = 103 i$

$j = -39 j$

$k = 99 k$

3) Find the angle between the two given vectors

A= (6, 7, -15) B= (6, -17, 9)

$A \cdot B = -218$

$A \theta B = 127.91°$ $\measuredangle AB = 52.08°$

4) Draw the complete FBD for the following exercise, showing the resultant forces made by the distributed force, and the reaction force of the two supports (just the vector).

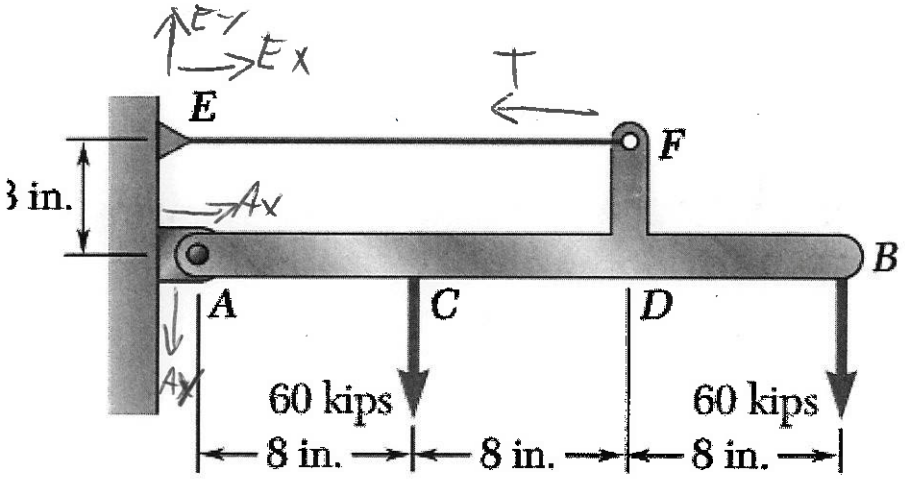

5) If the addition of moments in C = 64kN*m, and the reaction force in D = 10kN. How much and with what direction is the resultant force in A?

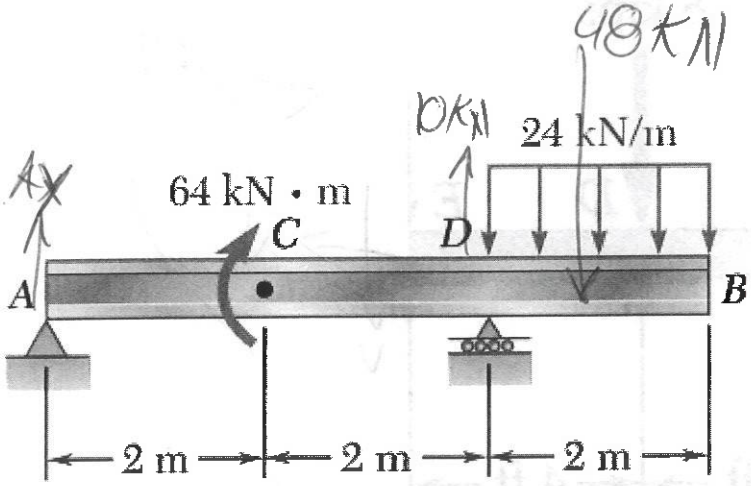

$\Sigma M_C = -64\ kN{\cdot}m$

$-A_y(2) + 10(2) - 48(3) = -64$

$-A_y(2) - 124 = -64$

$A_y(2) = -60$

$A_y = -30\ kN$

$A_y = 30\ kN\downarrow$

$-A_y(2) + 10(2) - 48(3) = 64$

$-A_y(2) - 124 = 64$

$A_y = \frac{188}{2}$

$A_y = 94$

6) Assume the reaction in A is equal to 13kips, calculate normal, shear and momentum in E of the following cut.

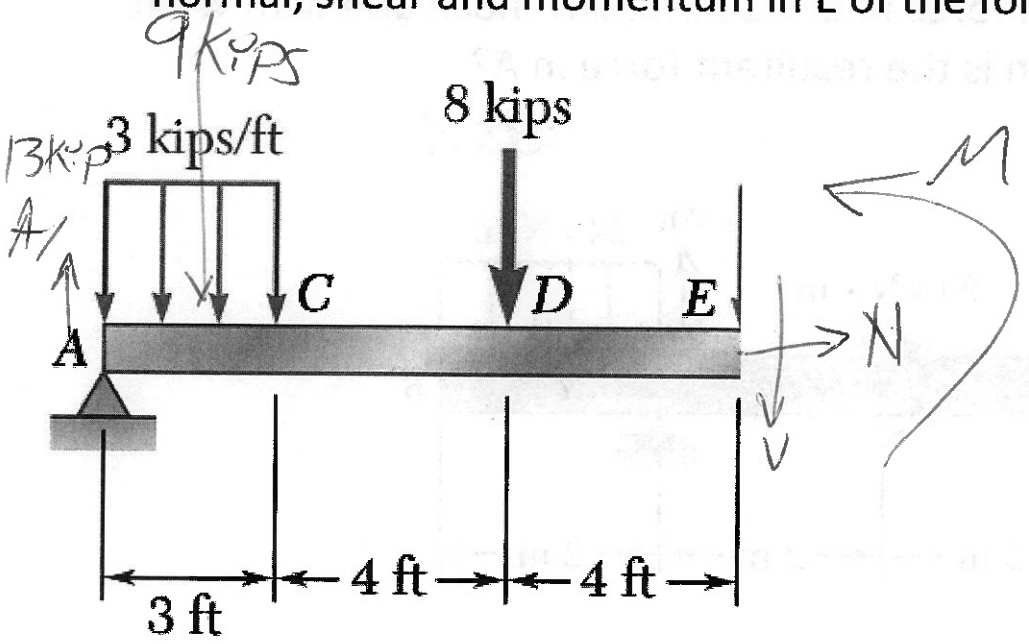

$\Sigma F_x = \emptyset \qquad \Sigma F_y = \emptyset$

$N = \emptyset \qquad +13 - 9 - 8 - V = \emptyset$

$V = -4$ kips

$\Sigma M_E = \emptyset$

$13(11) + 9(9.5) + 8(4) + M = \emptyset$

$M = -255$ kNlom

$M = -117.5$ kNlom

EXTRA (5pts)

7) Calculate the total torque generated to set the ship free acording to the figure bellow

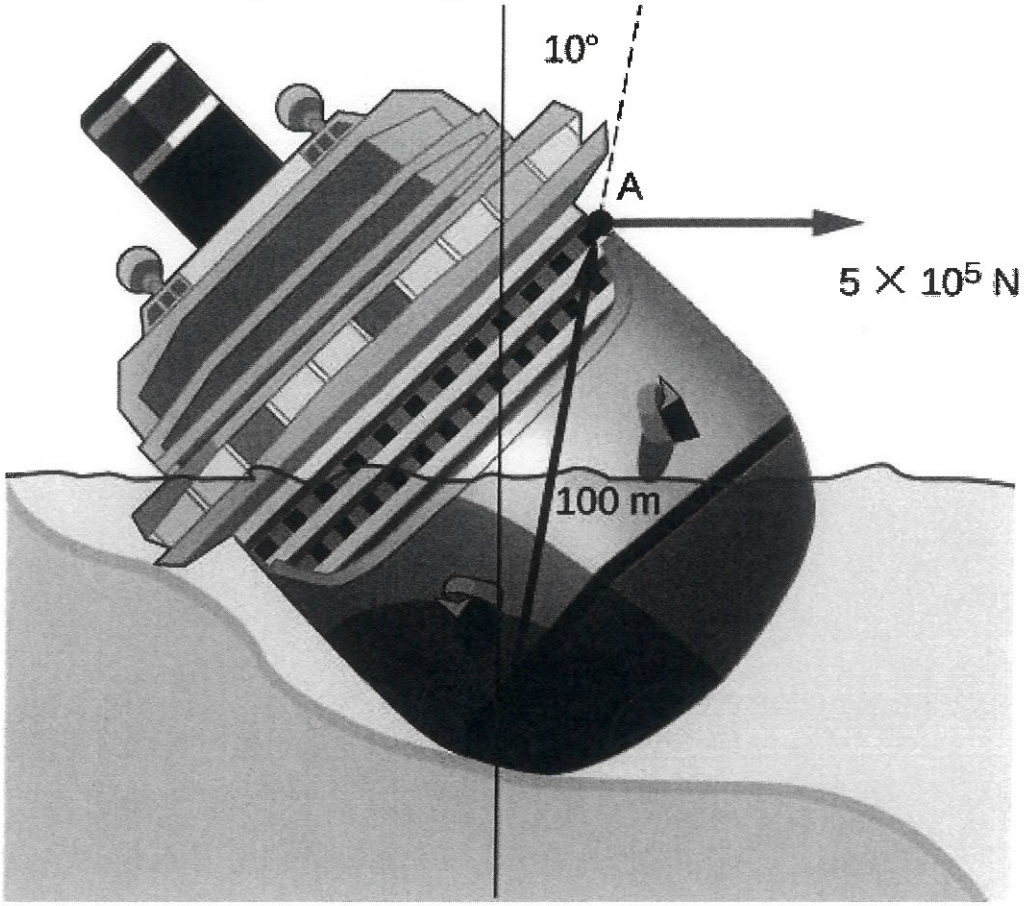

~~100 sin(10) = 17.36 m~~

$100\cos(10) = 98.48\,m$
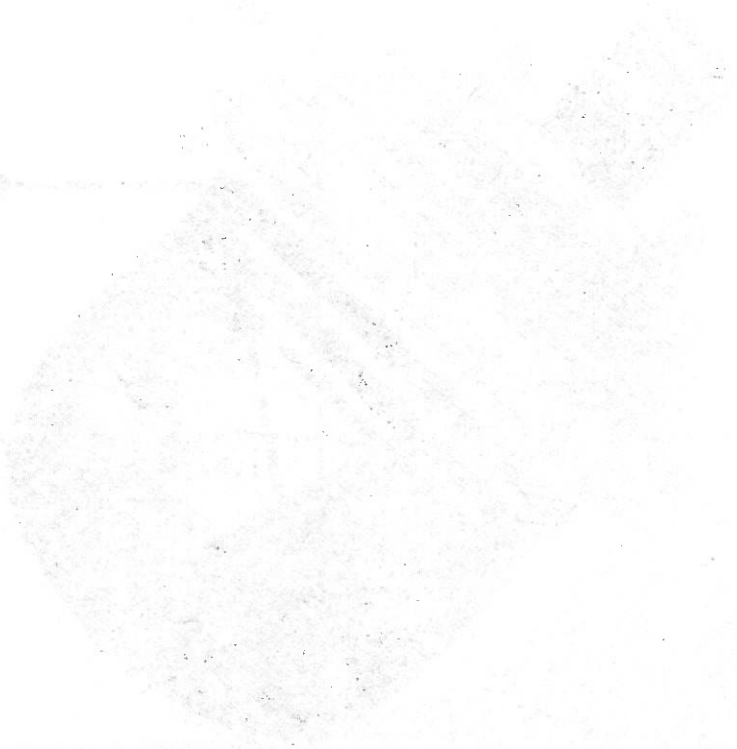
$98.48\,m\,(5\times10^{5}) = 49.24\times10^{6}\,N$